SYSTEM WIRING DIAGRAMS
2.4L, Air Conditioning Circuits, Auto A/C (2 of 2)
1997 Volvo 850
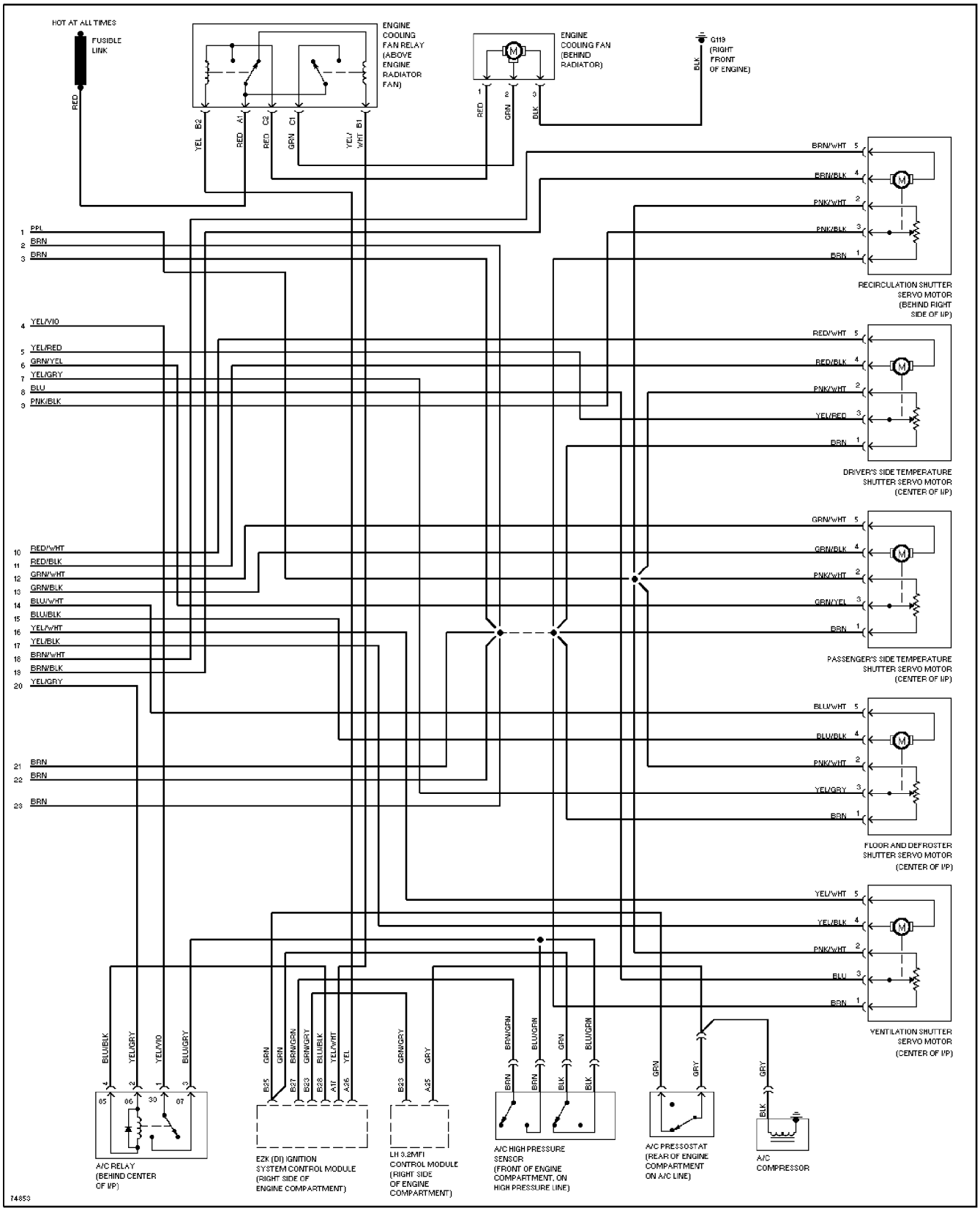
For DIAKOM-AUTO http://www.diakom.ru Taganrog support@diakom.ru (8634)315187
Copyright © 1998 Mitchell Repair Information Company, LLC
Thursday, December 14, 2000 11:41AM